Handles I

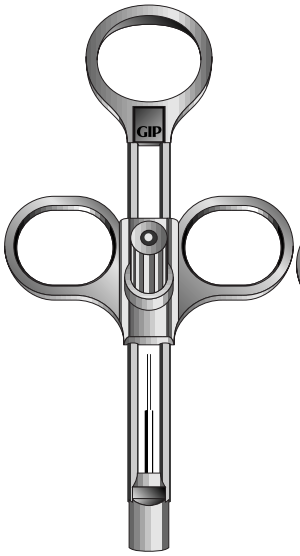

Handle for
Cytology Brush

Order no. 100300

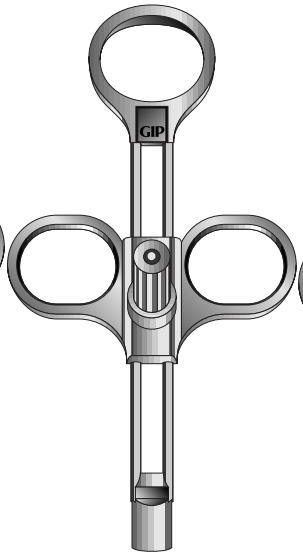

Handle for
non-rotatable
Sphincterotome
and for
Hot-Biopsy Forceps
Order no. 100500

HF High Frequency

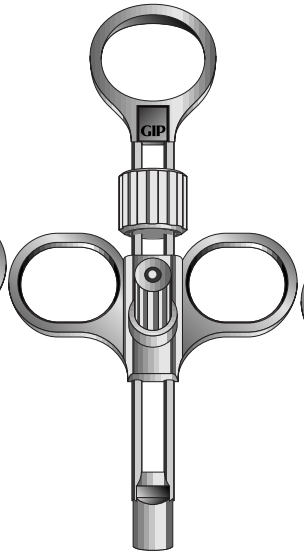

Handle
with stopper
for non-rotatable
Sphincterotome

Order no. 100510

HF High Frequency

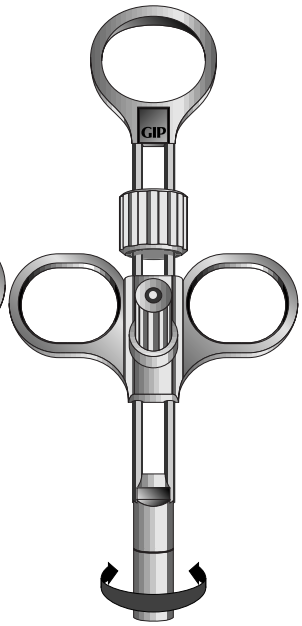

Handle
with stopper for
rotatable
Sphincterotome
Order no. 100520

HF High Frequency

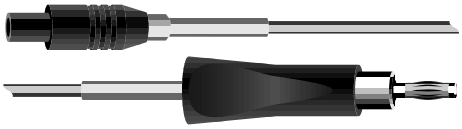

Active Cord for:	Order no.:
Erbe 4 mm	100502
Erbe 5 mm	100503
Martin/Berchthold 4 mm	100504
Valleylab	100505
Olympus	100506

Instrument Holder
for Stone Extractor Basket • Order no. 100601

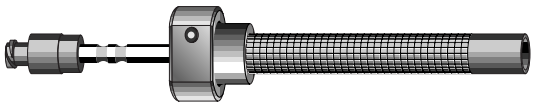

Handle for Disposable Sclerotherapy Needle (225320)
and Aspiration Needle for Bronchoscopy (230200)
Order no. 100205

Handle for Ultrasonic FNA Needle
"Type Hancke-Vilmann"
Order no. 100202

Handles II

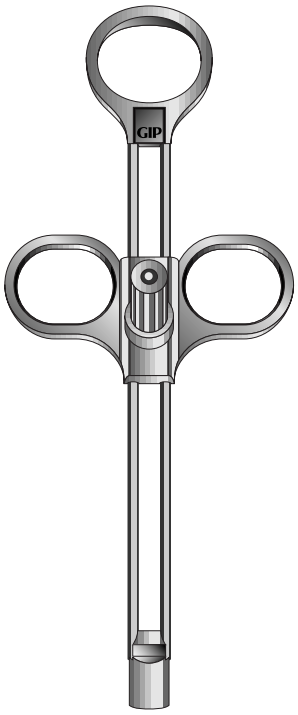

Handle for
Foreign Body Retriever Basket
and for Stone Extractor Basket

Order no. 100600

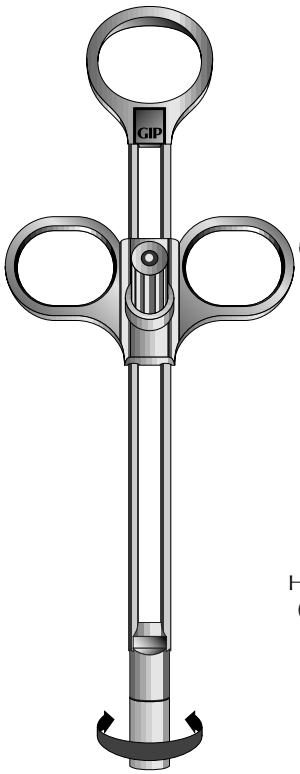

Handle for Polypectomy Snare
and B II Sphincterotome
(513430)
Order no. 100700

HF
High Frequency

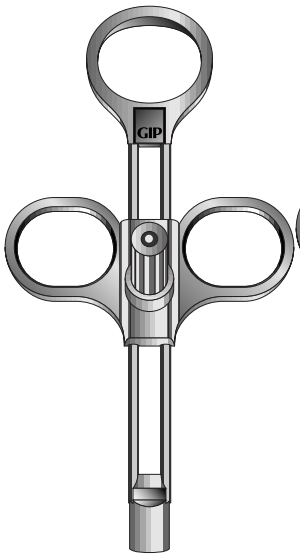

Handle for Foreign Body Retriever
(804..., 805..., 807... and 812...)
Order no. 100800

Cleaning Nozzle for Foreign
Body Retriever
(802... and 803...)
Order no. 100801

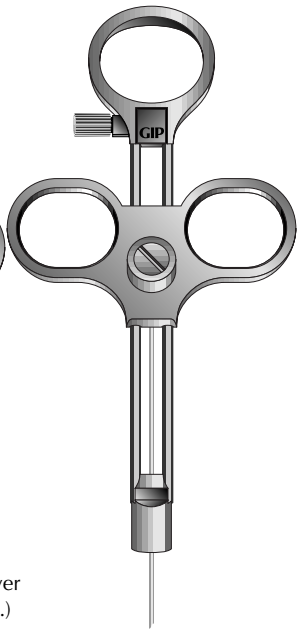

Handle with inner tube
for Foreign Body Retriever
(802360 and 803360)
Order no. 100802

For
(802460 and 803460)
Order no. 100803

Insulated Instrument Holder with HF-connector for large asymmetrical
Polypectomy Snare (709..., 710..., 711... and 712...) • Order no. 100703

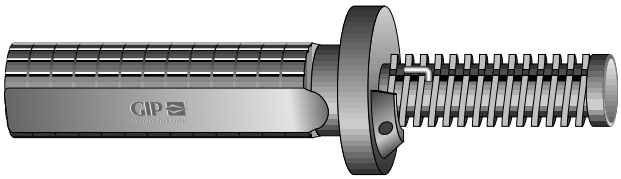

Handle for
Windup Guide 2.2 mm • Order no. 100900
Windup Guide 3.0 mm • Order no. 100901

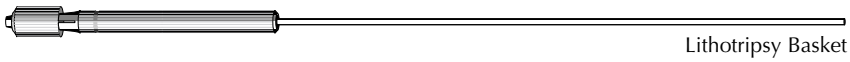

Instrument Holder for:
Lithotripsy Basket 2.6 mm • Order no. 600303
Lithotripsy Basket 3.5 mm • Order no. 600403

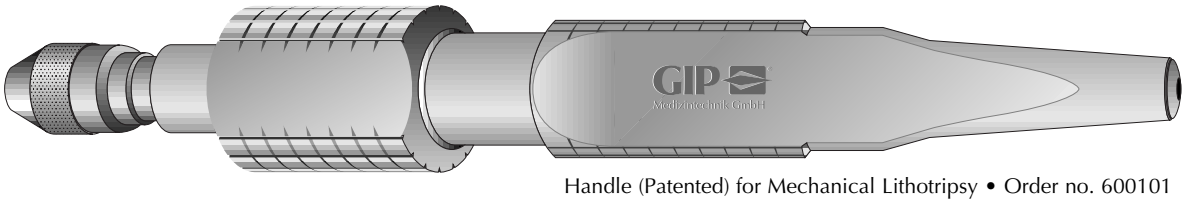

Handle (Patented) for Mechanical Lithotripsy • Order no. 600101

How to use the catalog?
Place the appropriate endoscope manufacturer's card through the file rings on the desired instrument page. The shaded sections on the endoscope cards should match up to the shaded sections on the catalog pages. Match up the endoscope model number with the appropriate instrument and corresponding catalog order number.

Order-No.
401140
401140
401140
401240
401240
401240
401240
401240
401360
401360
401360
401360
401360
401360
401360
401360
401360
401360
401360
401360
401360
401240
401240
401240
401460
401460
401460
401460
401460
401460
401460
401460
401460
401460
401460

Biopsy Forceps for small working channels

Ø 1.8 mm

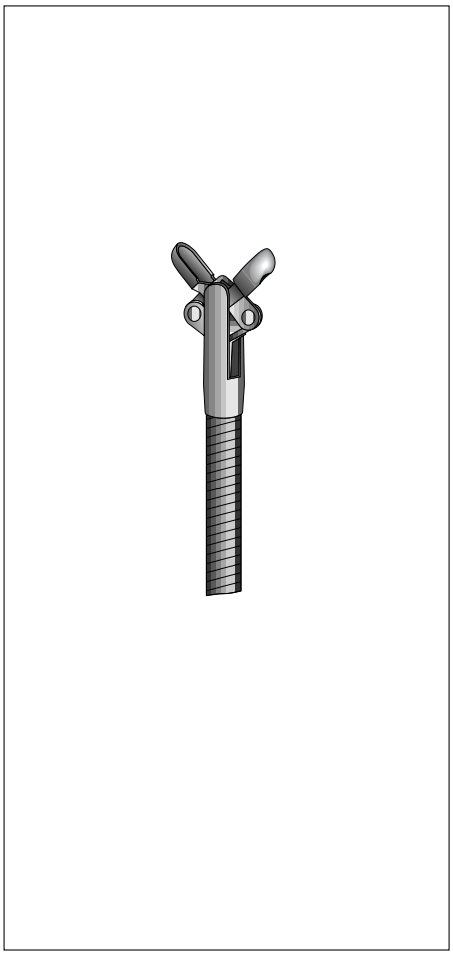

A Autoclavable

- Oval fenestrated cups
- Ground distal spiral portion
- Detachable distal tip

F Flushable L LuerLock This Instrument is also available in **Flushable** version (Ø 2.0 mm). To order, please indicate by putting an "F" behind the order number.

How to use the catalog?
Place the appropriate endoscope manufacturer's card through the file rings on the desired instrument page. The shaded sections on the endoscope cards should match up to the shaded sections on the catalog pages. Match up the endoscope model number with the appropriate instrument and corresponding catalog order number.

Order-No.
402140
402140
402140
402240
402240
402240
402240
402240
402360
402360
402360
402360
402360
402360
402360
402360
402360
402360
402360
402360
402360
402240
402240
402240
402460
402460
402460
402460
402460
402460
402460
402460
402460
402460
402460

Biopsy Forceps for small working channels

Ø 1.8 mm

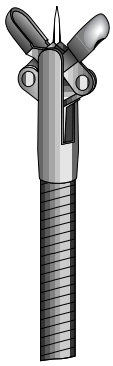

A Autoclavable

- Oval fenestrated cups with needle
- Ground distal spiral portion
- Detachable distal tip

F Flushable L LuerLock This Instrument is also available in **Flushable** version (Ø 2.0 mm). To order, please indicate by putting an "F" behind the order number.

How to use the catalog?
Place the appropriate endoscope manufacturer's card through the file rings on the desired instrument page. The shaded sections on the endoscope cards should match up to the shaded sections on the catalog pages. Match up the endoscope model number with the appropriate instrument and corresponding catalog order number.

Order-No.
408140
408240
408240
408240
408360
408360
408360
408360
408360
408360
408360
408360
408360
408240
408240
408240
408460
408460
408460
408460
408460
408460
408460
408460
408460
408460
408460
100500

Related Accessories required for HF-version
Handle (illustrated on page II) → 100500
Active Cord (illustrated on page II)
not required if using an Olympus or
Microvasive HF-Generator

Toothed Cups Biopsy Forceps for incrusted tissue

Ø 2.3 mm

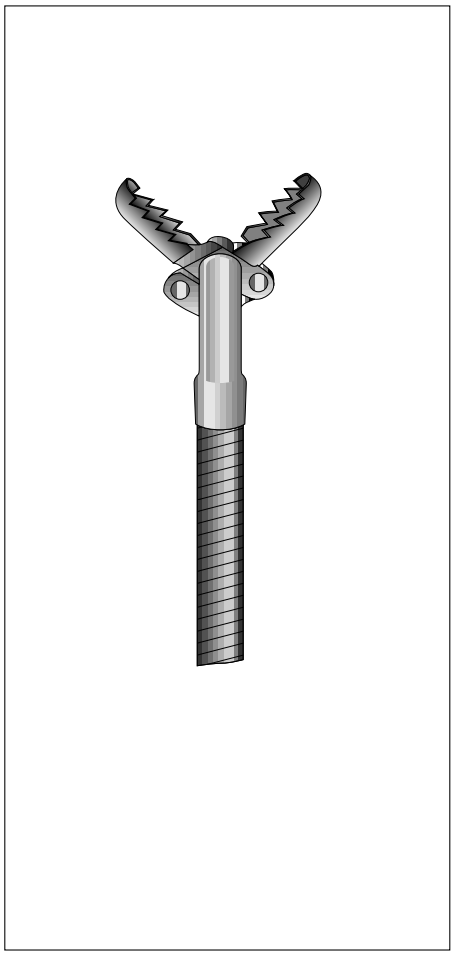

A Autoclavable

- Oval fenestrated cups
- Ground distal spiral portion
- Detachable distal tip

F Flushable L LuerLock This Instrument is also available in **Flushable** version (Ø 2.3 mm). To order, please indicate by putting an "F" behind the order number.

HF High Frequency This Instrument is also available in **High Frequency** version (Ø 2.5 mm). To order, please indicate by putting an "H" behind the order number.

How to use the catalog?
Place the appropriate endoscope manufacturer's card through the file rings on the desired instrument page. The shaded sections on the endoscope cards should match up to the shaded sections on the catalog pages. Match up the endoscope model number with the appropriate instrument and corresponding catalog order number.

Order-No.

411360

411360
411360

411240
411240

411460
411460
411460
411460
411460

Related Accessories required for HF-version
Handle (illustrated on page II) → 100500
Active Cord (illustrated on page II)
not required if using an Olympus or
Microvasive HF-Generator

Jumbo Biopsy Forceps for large working channels

Ø 3.4 mm

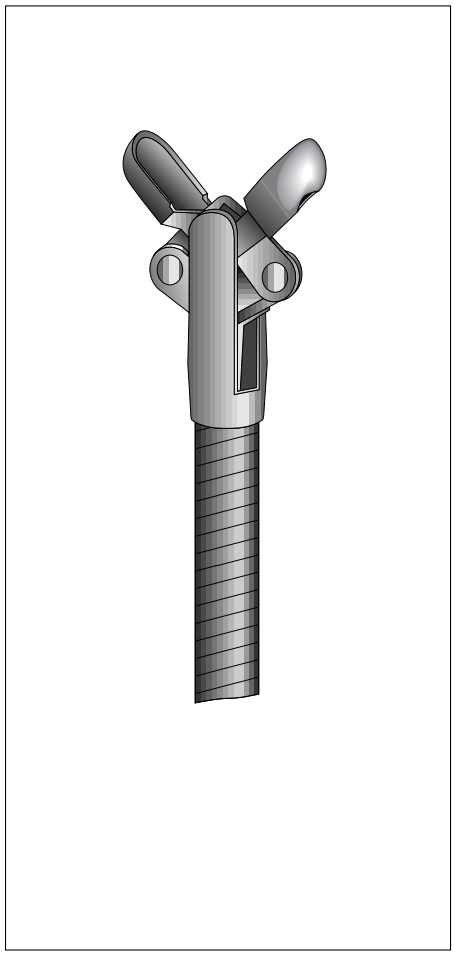

A Autoclavable

- Oval fenestrated cups
- Ground distal spiral portion
- Detachable distal tip

F Flushable L LuerLock This Instrument is also available in **Flushable** version. To order, please indicate by putting an "F" behind the order number.

HF High Frequency This Instrument is also available in **High Frequency** version. To order, please indicate by putting an "H" behind the order number.

How to use the catalog?
Place the appropriate endoscope manufacturer's card through the file rings on the desired instrument page. The shaded sections on the endoscope cards should match up to the shaded sections on the catalog pages. Match up the endoscope model number with the appropriate instrument and corresponding catalog order number.

Foreign Body Retriever

Ø 2.6 mm

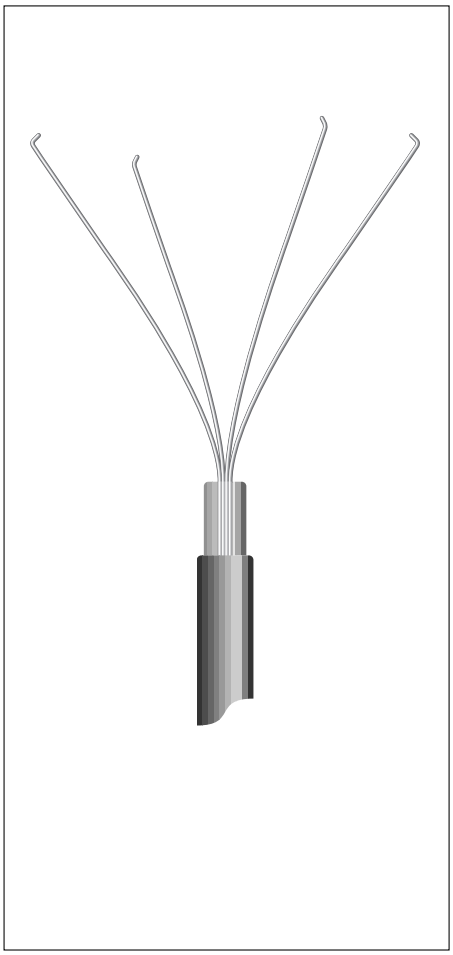

D Detachable | L LuerLock

- Four prong Grasper with hooks
- Stationary Operation
- Outer Teflon® catheter
- **Not Autoclavable**

		Order-No.
		802360
		802360
		802360
		802360
		802360
		802360
		802360
		802360
		802460
		802460
		802460
		802460
		802460
		802460
		802460
		802460
		802460
		802460
Cleaning Nozzle (illustrated on page III)		802460
Replacement components:		
Grasper for:	802360 →	802361
	802460 →	802461
Outer Teflon® Tube for:	802360 →	802363
	802460 →	802463
Handle with Inner Tube for:	802360 →	100802
(illustrated on page III)	802460 →	100803

How to use the catalog?
Place the appropriate endoscope manufacturer's card through the file rings on the desired instrument page. The shaded sections on the endoscope cards should match up to the shaded sections on the catalog pages. Match up the endoscope model number with the appropriate instrument and corresponding catalog order number.

Polyp Retriever

Ø 2.5 mm

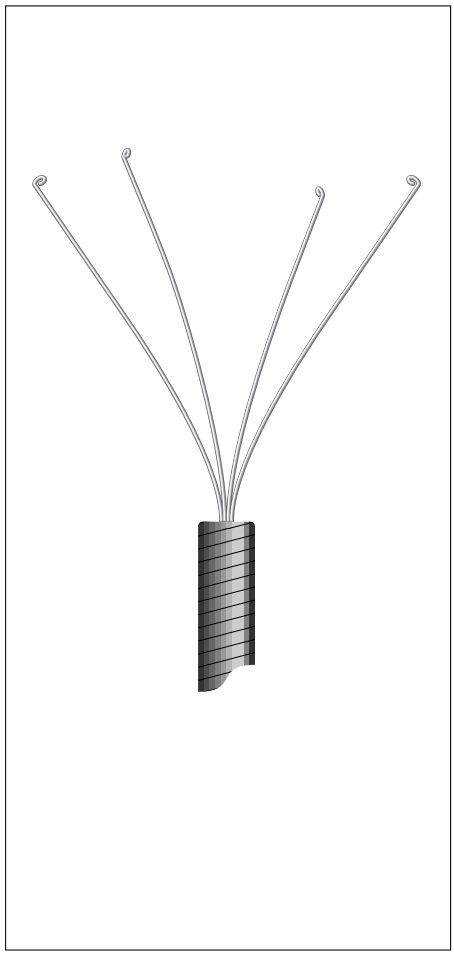

A Autoclavable | D Detachable | L LuerLock

- Four prong Grasper with eyelets
- Outer Metal Spiral sheath

	Order-No.

How to use the catalog?
Place the appropriate endoscope manufacturer's card through the file rings on the desired instrument page. The shaded sections on the endoscope cards should match up to the shaded sections on the catalog pages. Match up the endoscope model number with the appropriate instrument and corresponding catalog order number.

Foreign Body Retriever

Ø 2.5 mm

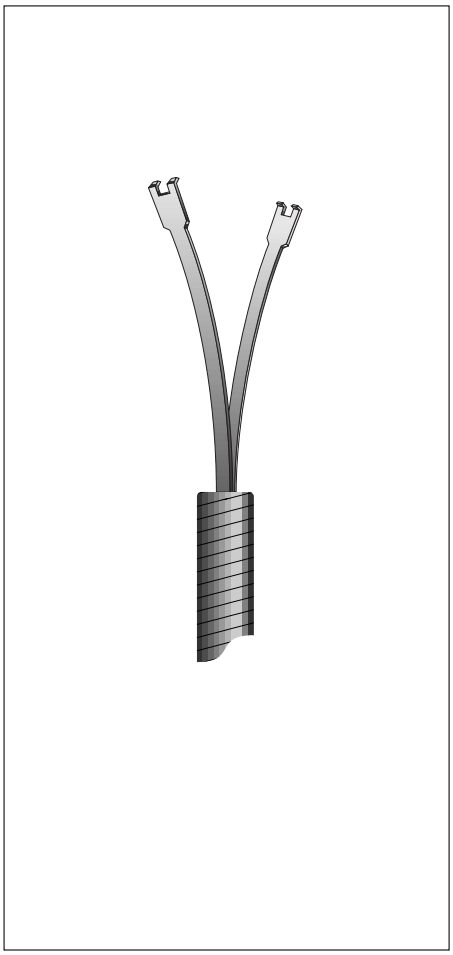

A Autoclavable | D Detachable | L LuerLock

- Forked jaws (2:2) Grasper
- Outer Metal Spiral sheath

	Order-No.
	807360
	807360
	807360
	807360
	807360
	807360
	807360
	807360
	807360
	807360
	807360
	807460
	807460
	807460
	807460
	807460
	807460
	807460
	807460
	807460
	807460
Replacement components:	
Grasper for: 807360 →	807361
807460 →	807461
Outer Metal Spiral for: 807360 →	807363
807460 →	807463
Handle (illustrated on page III): →	100800

How to use the catalog?
Place the appropriate endoscope manufacturer's card through the file rings on the desired instrument page. The shaded sections on the endoscope cards should match up to the shaded sections on the catalog pages. Match up the endoscope model number with the appropriate instrument and corresponding catalog order number.

Foreign Body Retriever

Ø 2.5 mm

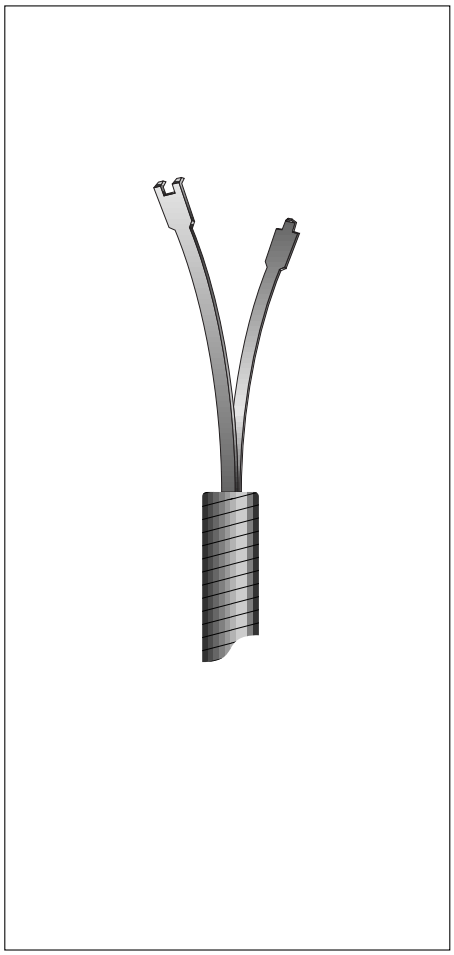

A Autoclavable | D Detachable | L LuerLock

- Forked jaws (1:2) Grasper
- Outer Metal Spiral sheath

Order-No.
812360
812360
812360
812360
812360
812360
812360
812360
812360
812360
812360
812460
812460
812460
812460
812460
812460
812460
812460
812460
812460
812460
812361
812461
812363
812463
100800

Replacement components:

Grasper for:	812360 →	812361
	812460 →	812461
Outer Metal Spiral for:	812360 →	812363
	812460 →	812463
Handle (illustrated on page III):	→	100800

How to use the catalog?
Place the appropriate endoscope manufacturer's card through the file rings on the desired instrument page. The shaded sections on the endoscope cards should match up to the shaded sections on the catalog pages. Match up the endoscope model number with the appropriate instrument and corresponding catalog order number.

Order-No.
816360
816360
817360
817360
817360
816360
816360
817360
817360
817360
817360
817360
817360
817360
817360
817460
817460
817460
817460
817460
817460
817460
817460
817460
817460
817460

Rat Tooth Forceps

Ø 1.8 mm Ø 2.3 mm

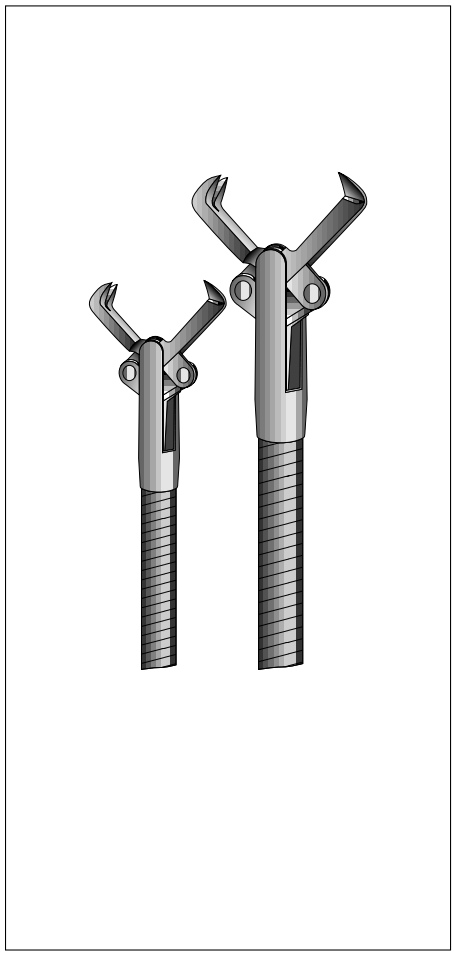

A Autoclavable D Detachable

- Ground distal spiral portion
- Detachable distal tip

How to use the catalog?
Place the appropriate endoscope manufacturer's card through the file rings on the desired instrument page. The shaded sections on the endoscope cards should match up to the shaded sections on the catalog pages. Match up the endoscope model number with the appropriate instrument and corresponding catalog order number.

Order-No.
820360
820360
821360
821360
821360
820360
820360
821360
821360
821360
821360
821360
821360
821360
821360
821460
821460
821460
821460
821460
821460
821460
821460
821460
821460
821460

Alligator Forceps

Ø 1.8 mm Ø 2.3 mm

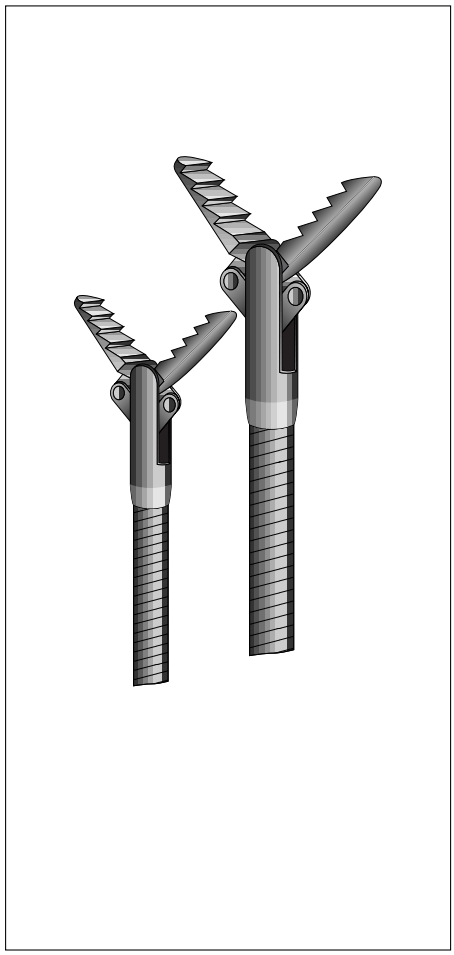

A Autoclavable D Detachable

- Ground distal spiral portion
- Detachable distal tip

How to use the catalog?
Place the appropriate endoscope manufacturer's card through the file rings on the desired instrument page. The shaded sections on the endoscope cards should match up to the shaded sections on the catalog pages. Match up the endoscope model number with the appropriate instrument and corresponding catalog order number.

Order-No.
841360
841360
841360
841360
841360
841360
841360
841360
841360
841360
841360
841360
841360
841460
841460
841460
841460
841460
841460
841460
841460
841460
841460
841460
100600

Related Accessories
Handle (illustrated on page III) → 100600

Foreign Body Basket

Ø 1.9 mm

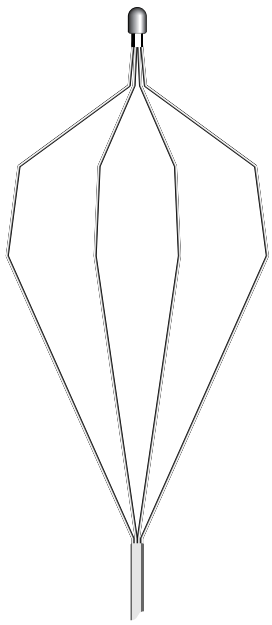

Drawing 1:1

A Autoclavable | D Detachable

- Four wire
- 35 mm Basket diameter
- Outer Teflon® sheath

How to use the catalog?
Place the appropriate endoscope manufacturer's card through the file rings on the desired instrument page. The shaded sections on the endoscope cards should match up to the shaded sections on the catalog pages. Match up the endoscope model number with the appropriate instrument and corresponding catalog order number.

Polypectomy Snare

Ø 1.8 mm Ø 2.5 mm

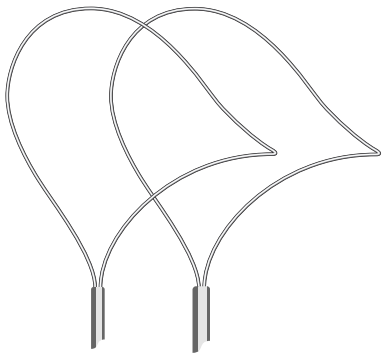

Drawing 1:1

A Autoclavable | D Detachable | L LuerLock | HF High Frequency

- Asymmetrical loop, 25 mm
- Braided wire

	Order-No.
	706360
	705360
	705360
	706360
	706360
	706360
	706360
	706360
	705360
	705360
	706360
	706360
	706360
	706360
	706360
	706360
	706360
	706460
	706460
	706460
	706460
	706460
	706460
	706460
	706460
	706460
	706460
	706460
Related Accessories (required)	
Handle (illustrated on page III) →	100700
Outer Teflon® sheath for: 705360 →	705363
706360 →	703363
706460 →	703463
Active Cord (illustrated on page II)	
not required if using an Olympus or	
Microvasive HF-Generator	

How to use the catalog?
Place the appropriate endoscope manufacturer's card through the file rings on the desired instrument page. The shaded sections on the endoscope cards should match up to the shaded sections on the catalog pages. Match up the endoscope model number with the appropriate instrument and corresponding catalog order number.

Order-No.
707360
707360
707360
707360
707360
707360
707360
707360
707360
707360
707360
707360
707460
707460
707460
707460
707460
707460
707460
707460
707460
707460
707460
100700
703363
703463

Related Accessories (required)
Handle (illustrated on page III) →
Outer Teflon® sheath for: 707360 →
707460 →
Active Cord (illustrated on page II)
not required if using an Olympus or
Microvasive HF-Generator

Polypectomy Snare

Ø 2.5 mm

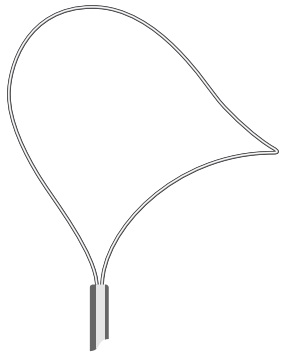

Drawing 1:1

A Autoclavable | D Detachable | L LuerLock | HF High Frequency

- Asymmetrical loop, 25 mm
- Braided wire

How to use the catalog?
Place the appropriate endoscope manufacturer's card through the file rings on the desired instrument page. The shaded sections on the endoscope cards should match up to the shaded sections on the catalog pages. Match up the endoscope model number with the appropriate instrument and corresponding catalog order number.

Order-No.
715360
715360
715360
715360
715360
715360
715360
715360
715360
715360
715360
715360
715460
715460
715460
715460
715460
715460
715460
715460
715460
715460
715460
100700
713363
713463

RotaSnare

Ø 2.5 mm

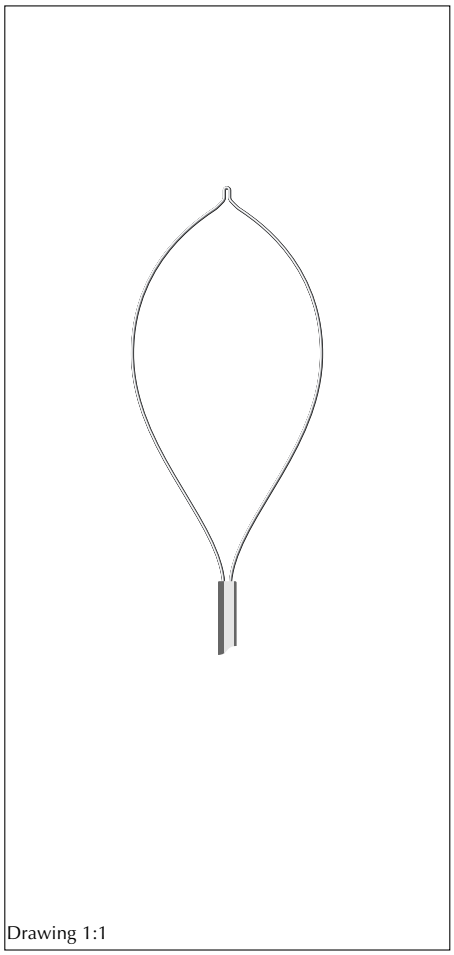

A Autoclavable | D Detachable | L LuerLock | HF High Frequency | R Rotatable

- Symmetrical loop, 25 mm
- Braided wire

Related Accessories (required)

Handle (illustrated on page III) →
Outer Teflon® sheath for: 715360 →
715460 →
Active Cord (illustrated on page II)
not required if using an Olympus or Microvasive HF-Generator

2 SingleUse | S Sterile

This Instrument is also available in **Single Use** version (not rotatable), sterile packed with outer sheath. To order, please indicate by putting "SU" behind the order number.

How to use the catalog?
Place the appropriate endoscope manufacturer's card through the file rings on the desired instrument page. The shaded sections on the endoscope cards should match up to the shaded sections on the catalog pages. Match up the endoscope model number with the appropriate instrument and corresponding catalog order number.

Order-No.
718360
718360
718360
718360
718360
718360
718360
718360
718360
718360
718360
718360
718460
718460
718460
718460
718460
718460
718460
718460
718460
718460
718460
100700
713363
713463

Related Accessories (required)
Handle (illustrated on page III) →
Outer Teflon® sheath for: 718360 →
718460 →
Active Cord (illustrated on page II)
not required if using an Olympus or Microvasive HF-Generator

RotaSnare

Ø 2.5 mm

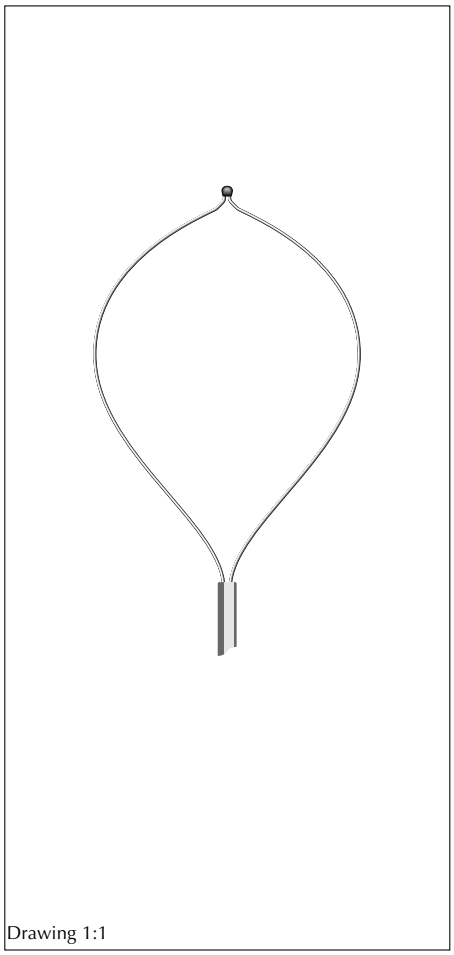

A Autoclavable | D Detachable | L LuerLock | HF High Frequency | R Rotatable

- Symmetrical loop, 35 mm
- Braided wire
- Insulated tip

2 SingleUse | S Sterile

This Instrument is also available in **Single Use** version (not rotatable), sterile packed with outer sheath. To order, please indicate by putting "SU" behind the order number.

How to use the catalog?
Place the appropriate endoscope manufacturer's card through the file rings on the desired instrument page. The shaded sections on the endoscope cards should match up to the shaded sections on the catalog pages. Match up the endoscope model number with the appropriate instrument and corresponding catalog order number.

Order-No.
720 360
720 360
720 360
720 360
720 360
720 360
720 360
720 360
720 360
720 360
720 360
720 360
720 360
720 460
720 460
720 460
720 460
720 460
720 460
720 460
720 460
720 460
720 460
720 460
100 700
713 363
713 463

Polypectomy Snare

Ø 2.5 mm

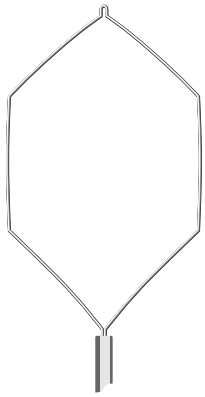

Drawing 1:1

A Autoclavable | D Detachable | L LuerLock | HF High Frequency

- Hexagonal loop, 25 mm
- Braided wire

Related Accessories (required)

Handle (illustrated on page III) →
Outer Teflon® sheath for: 720360 →
720460 →
Active Cord (illustrated on page II)
not required if using an Olympus or Microvasive HF-Generator

2 SingleUse | S Sterile

This Instrument is also available in **Single Use** version (not rotatable), sterile packed with outer sheath. To order, please indicate by putting "SU" behind the order number.

How to use the catalog?
Place the appropriate endoscope manufacturer's card through the file rings on the desired instrument page. The shaded sections on the endoscope cards should match up to the shaded sections on the catalog pages. Match up the endoscope model number with the appropriate instrument and corresponding catalog order number.

Order-No.

520420
520420
520420
520420
520420
520420

E.R.C.P.-Catheter

Ø 1.7 mm

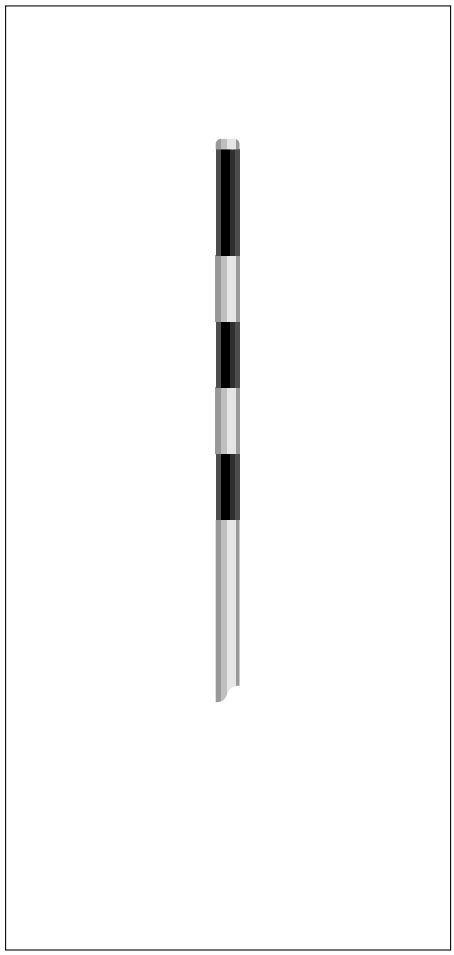

A Autoclavable | L LuerLock | .035" Guide Wire | C Contrast

- Standard tip
- 1.2 m long stylet included

2 SingleUse | S Sterile

This Instrument is also available in **Single Use** version, sterile packed. To order, please indicate by putting "SU" behind the order number.

How to use the catalog?
Place the appropriate endoscope manufacturer's card through the file rings on the desired instrument page. The shaded sections on the endoscope cards should match up to the shaded sections on the catalog pages. Match up the endoscope model number with the appropriate instrument and corresponding catalog order number.

Order-No.

522420
522420
522420
522420
522420
522420

E.R.C.P.-Catheter

Ø 1.7 mm

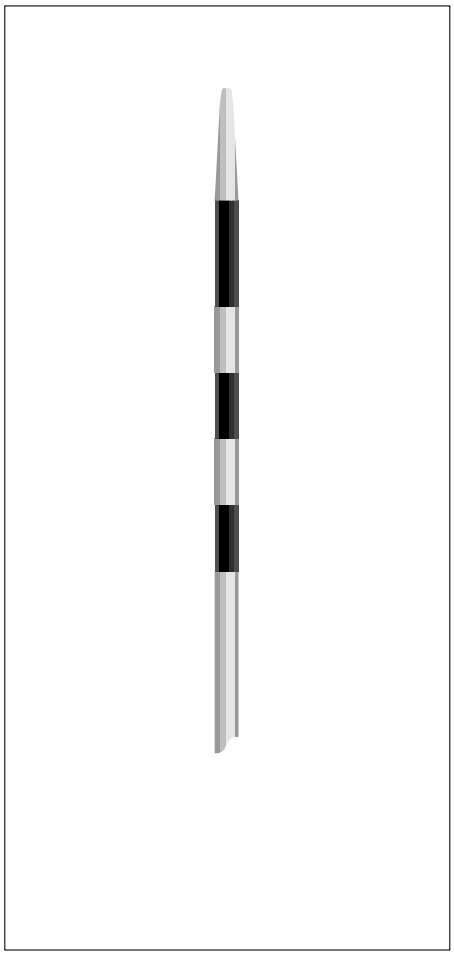

A Autoclavable | L LuerLock | .021" Guide Wire | C Contrast

- Tapered tip, 10 mm
- 1.2 m long stylet included

2 SingleUse | S Sterile

This Instrument is also available in **Single Use** version, sterile packed. To order, please indicate by putting "SU" behind the order number.

How to use the catalog?
Place the appropriate endoscope manufacturer's card through the file rings on the desired instrument page. The shaded sections on the endoscope cards should match up to the shaded sections on the catalog pages. Match up the endoscope model number with the appropriate instrument and corresponding catalog order number.

Order-No.

524420
524420
524420
524420
524420
524420

E.R.C.P.-Catheter

Ø 1.7 mm

A Autoclavable | L LuerLock | .021" Guide Wire | C Contrast

- Metal cone tip
- 1.2 m long stylet included

2 SingleUse | S Sterile

This Instrument is also available in **Single Use** version, sterile packed. To order, please indicate by putting "SU" behind the order number.

How to use the catalog?
Place the appropriate endoscope manufacturer's card through the file rings on the desired instrument page. The shaded sections on the endoscope cards should match up to the shaded sections on the catalog pages. Match up the endoscope model number with the appropriate instrument and corresponding catalog order number.

Order-No.

How to use the catalog?
Place the appropriate endoscope manufacturer's card through the file rings on the desired instrument page. The shaded sections on the endoscope cards should match up to the shaded sections on the catalog pages. Match up the endoscope model number with the appropriate instrument and corresponding catalog order number.

Order-No.

How to use the catalog?
Place the appropriate endoscope manufacturer's card through the file rings on the desired instrument page. The shaded sections on the endoscope cards should match up to the shaded sections on the catalog pages. Match up the endoscope model number with the appropriate instrument and corresponding catalog order number.

Order-No.

How to use the catalog?
Place the appropriate endoscope manufacturer's card through the file rings on the desired instrument page. The shaded sections on the endoscope cards should match up to the shaded sections on the catalog pages. Match up the endoscope model number with the appropriate instrument and corresponding catalog order number.

Order-No.

How to use the catalog?
Place the appropriate endoscope manufacturer's card through the file rings on the desired instrument page. The shaded sections on the endoscope cards should match up to the shaded sections on the catalog pages. Match up the endoscope model number with the appropriate instrument and corresponding catalog order number.

Order-No.

How to use the catalog?
Place the appropriate endoscope manufacturer's card through the file rings on the desired instrument page. The shaded sections on the endoscope cards should match up to the shaded sections on the catalog pages. Match up the endoscope model number with the appropriate instrument and corresponding catalog order number.

Order-No.

513430
513430
513430
513430
513430
513430

Related Accessories (required)
Handle (illustrated on page II) → 100700
Active Cord (illustrated on page II)
not required if using an Olympus or
Microvasive HF-Generator

B II Sphincterotome

Ø 1.8 mm

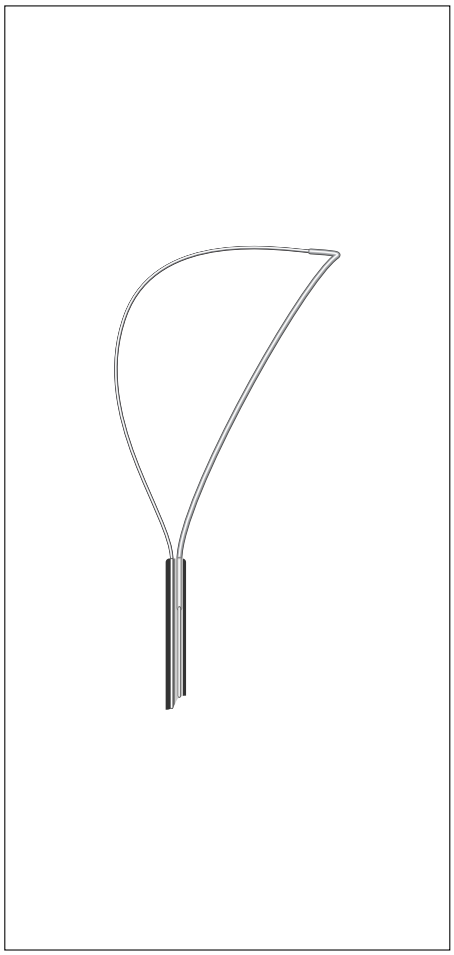

A Autoclavable | L LuerLock | C Contrast | HF High Frequency

- Variable cutting wire

R Rotatable This Instrument is also available in **Rotatable** version. To order, please indicate by putting an "R" behind the order number. Do not forget to order the rotatable handle number 100520 (illustrated on page II).

2 SingleUse | S Sterile This Instrument is also available in **Single Use** version, sterile packed. To order, please indicate by putting "SU" behind the order number.

How to use the catalog?
Place the appropriate endoscope manufacturer's card through the file rings on the desired instrument page. The shaded sections on the endoscope cards should match up to the shaded sections on the catalog pages. Match up the endoscope model number with the appropriate instrument and corresponding catalog order number.

Order-No.

How to use the catalog?
Place the appropriate endoscope manufacturer's card through the file rings on the desired instrument page. The shaded sections on the endoscope cards should match up to the shaded sections on the catalog pages. Match up the endoscope model number with the appropriate instrument and corresponding catalog order number.

Order-No.

517404
517404
517404
517404
517404
517404

Fistolotome

Ø 1.7 mm

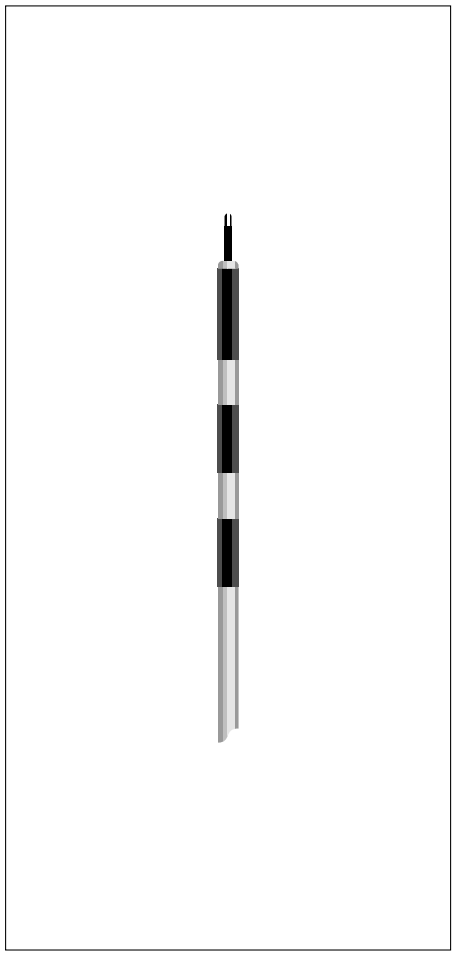

A Autoclavable | L LuerLock | .035" Guide Wire | HF High Frequency

- 4 mm cutting spiral
- HF-connector attached

Related Accessories (required)
Active Cord (illustrated on page II)
not required if using an Olympus or
Microvasive HF-Generator

2 SingleUse | S Sterile

This Instrument is also available in **Single Use** version, sterile packed. To order, please indicate by putting "SU" behind the order number.

How to use the catalog?
Place the appropriate endoscope manufacturer's card through the file rings on the desired instrument page. The shaded sections on the endoscope cards should match up to the shaded sections on the catalog pages. Match up the endoscope model number with the appropriate instrument and corresponding catalog order number.

Order-No.
610420
610420
609420

How to use the catalog?
Place the appropriate endoscope manufacturer's card through the file rings on the desired instrument page. The shaded sections on the endoscope cards should match up to the shaded sections on the catalog pages. Match up the endoscope model number with the appropriate instrument and corresponding catalog order number.

Order-No.

613420
613420
613420
613420

Optional
Handle (illustrated on page III) → 100600

Guiding Tip
Stone Extractor Basket

Ø 2.5 mm

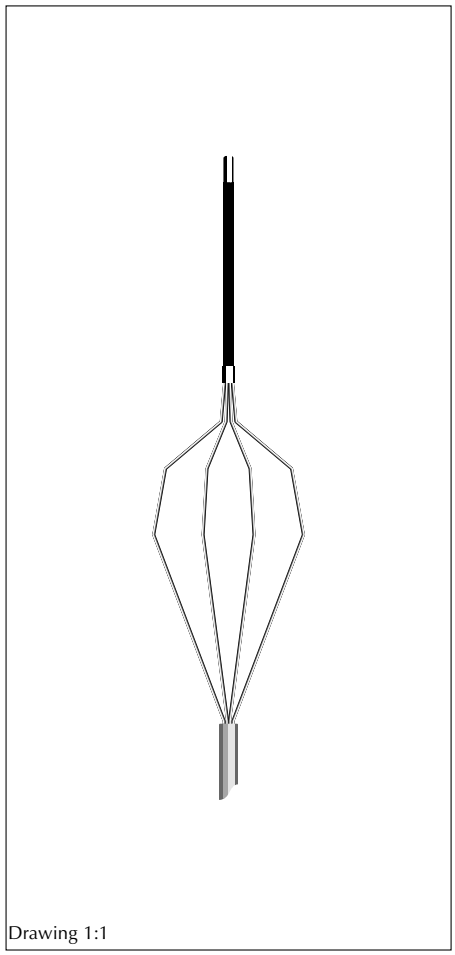

Drawing 1:1

D Detachable | A Autoclavable | L LuerLock | .035" Guide Wire | C Contrast

- Set consists of basket, outerTeflon® sheath, sealing cap and instrument holder
- 30 mm flexible guiding tip Ø 1.3 mm
- Four-wire construction
- Gold-plated basket
- 20 mm Basket diameter

How to use the catalog?
Place the appropriate endoscope manufacturer's card through the file rings on the desired instrument page. The shaded sections on the endoscope cards should match up to the shaded sections on the catalog pages. Match up the endoscope model number with the appropriate instrument and corresponding catalog order number.

	Order-No.

How to use the catalog?
Place the appropriate endoscope manufacturer's card through the file rings on the desired instrument page. The shaded sections on the endoscope cards should match up to the shaded sections on the catalog pages. Match up the endoscope model number with the appropriate instrument and corresponding catalog order number.

Order-No.

600101
600101
600101
600101

Patented Mechanical Lithotriptor

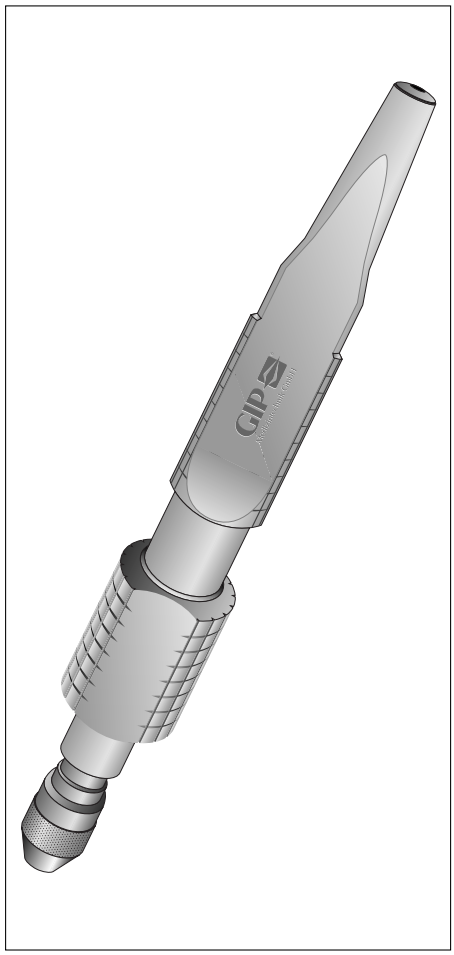

A
Autoclavable

- Patented, coaxial fixation of the braided cable to the handle
- Unique pull or twist methods for stone crushing
- Easy and comfortable handling

How to use the catalog?
Place the appropriate endoscope manufacturer's card through the file rings on the desired instrument page. The shaded sections on the endoscope cards should match up to the shaded sections on the catalog pages. Match up the endoscope model number with the appropriate instrument and corresponding catalog order number.

Lithotripsy Basket

Ø 3.1 mm

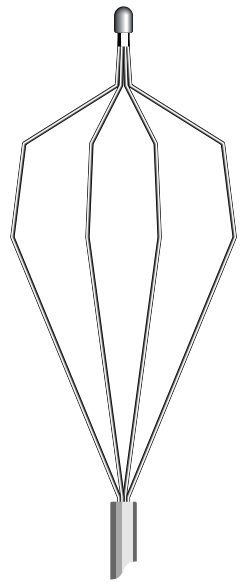

Drawing 1:1

A Autoclavable

- Four-wire construction
- Gold-plated basket
- 4.000 mm Basket wire assembly
- 30 mm Basket diameter

- For those applications requiring the injection of contrast medium, a sealing cap and an outer Teflon® sheath are available*

	Order-No.
	602430
Related Accessories (required)	
*Outer Teflon® sheath →	600402
Metal Spiral (180 cm length) →	600401
Instrument holder (illustrated on page III) →	600403
Emergency Metal Spiral (80 cm length) →	600405
*Sealing Cap →	602001

How to use the catalog?
Place the appropriate endoscope manufacturer's card through the file rings on the desired instrument page. The shaded sections on the endoscope cards should match up to the shaded sections on the catalog pages. Match up the endoscope model number with the appropriate instrument and corresponding catalog order number.

Order-No.

How to use the catalog?
Place the appropriate endoscope manufacturer's card through the file rings on the desired instrument page. The shaded sections on the endoscope cards should match up to the shaded sections on the catalog pages. Match up the endoscope model number with the appropriate instrument and corresponding catalog order number.

Resposable Sclerotherapy Needle

Ø 1.9 mm

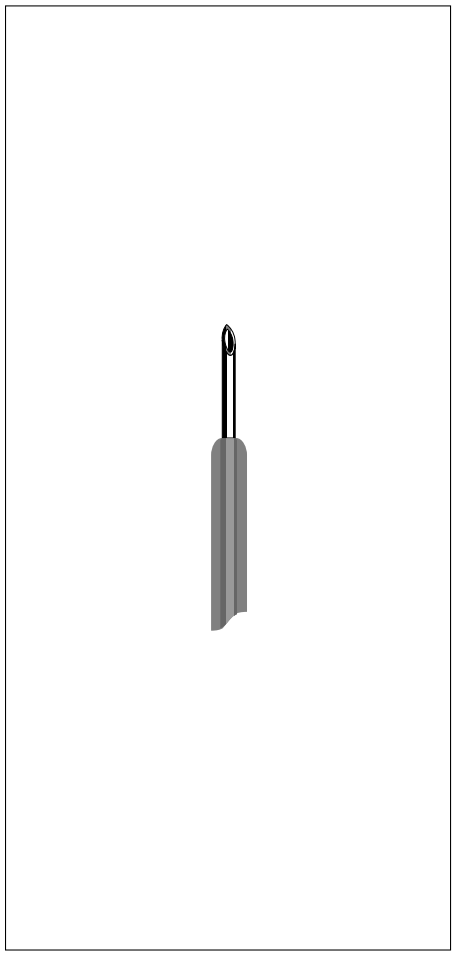

L LuerLock | 2 SingleUse

- Needle and outer Teflon® sheath
- 0.7 mm (23 Gauge) Needle diameter
- 6.0 mm Needle length

Order-No.
225240SU
225240SU
225240SU
225240SU
225360SU
225360SU
225360SU
225360SU
225360SU
225360SU
225360SU
225360SU
225360SU
225360SU
225460SU
225460SU
225460SU
225460SU
225460SU
225460SU
225460SU
225460SU
225460SU
225460SU
225460SU
100205

Related Accessories (required)
Handle (illustrated on page II) → 100205

A Autoclavable

How to use the catalog?
Place the appropriate endoscope manufacturer's card through the file rings on the desired instrument page. The shaded sections on the endoscope cards should match up to the shaded sections on the catalog pages. Match up the endoscope model number with the appropriate instrument and corresponding catalog order number.

Order-No.
225245SU
225245SU
225245SU
225245SU
225365SU
225365SU
225365SU
225365SU
225365SU
225365SU
225365SU
225365SU
225365SU
225365SU
225465SU
225465SU
225465SU
225465SU
225465SU
225465SU
225465SU
225465SU
225465SU
225465SU
225465SU

Disposable Sclerotherapy Needle

Ø 1.9 mm

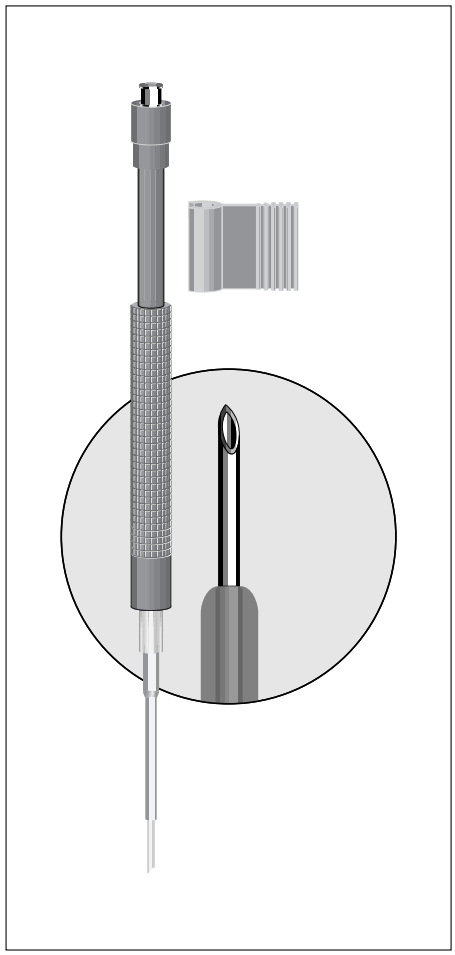

L LuerLock | 2 SingleUse

- Needle and outer Teflon® sheath
- Handle with safety clip
- 0.7 mm (23 Gauge) Needle diameter
- 6.0 mm Needle length

How to use the catalog?
Place the appropriate endoscope manufacturer's card through the file rings on the desired instrument page. The shaded sections on the endoscope cards should match up to the shaded sections on the catalog pages. Match up the endoscope model number with the appropriate instrument and corresponding catalog order number.

Order-No.

226245SU
226245SU
226245SU
226245SU

226365SU
226365SU
226365SU
226365SU
226365SU
226365SU
226365SU

226365SU
226365SU
226365SU

226465SU
226465SU
226465SU
226465SU
226465SU
226465SU
226465SU
226465SU
226465SU
226465SU
226465SU

Disposable Sclerotherapy Needle

Ø 2.3 mm

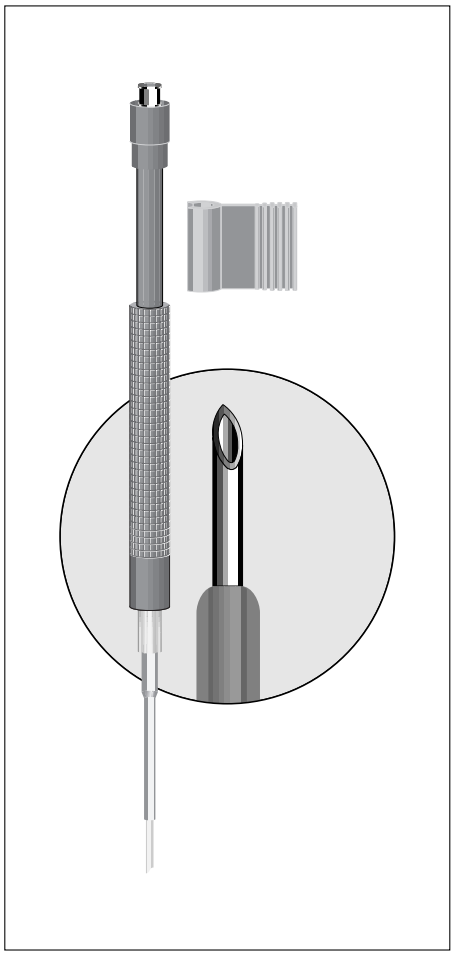

L LuerLock | 2 SingleUse

- Needle and outer Teflon® sheath
- Handle with safety clip
- 1.0 mm (20 Gauge) Needle diameter
- 6.0 mm Needle length

How to use the catalog?
Place the appropriate endoscope manufacturer's card through the file rings on the desired instrument page. The shaded sections on the endoscope cards should match up to the shaded sections on the catalog pages. Match up the endoscope model number with the appropriate instrument and corresponding catalog order number.

Order-No.
201360
201360
204360
204360
204360
201360
201360
204360
204360
204360
204360
204360
204360
204360
204360
204460
204460
204460
204460
204460
204460
204460
204460
204460
204460
204460
201362
204362
204462
201363
204363
204463

Replacement components:

Needle for:	201360 →	201362
	204360 →	204362
	204460 →	204462
Outer Teflon® sheath for:	201360 →	201363
	204360 →	204363
	204460 →	204463

Reusable Sclerotherapy Needle

Ø 1.7 mm Ø 2.1 mm

A Autoclavable L LuerLock

- 2 needles and outer Teflon® sheath
- Unique Handle with -safety clip not A Autoclavable-
- 0.7 mm Needle diameter
- 4.0 mm Needle length

How to use the catalog?
Place the appropriate endoscope manufacturer's card through the file rings on the desired instrument page. The shaded sections on the endoscope cards should match up to the shaded sections on the catalog pages. Match up the endoscope model number with the appropriate instrument and corresponding catalog order number.

Order-No.
207360
207360
207360
207360
207360
207360
207360
207360
207360
207360
207360
207460
207460
207460
207460
207460
207460
207460
207460
207460
207460
207460
207362
207462
207363
207463

Replacement components:

Needle for:	207360 →	207362
	207460 →	207462
Outer Teflon® sheath for:	207360 →	207363
	207460 →	207463

Reusable Sclerotherapy Needle

Ø 2.3 mm

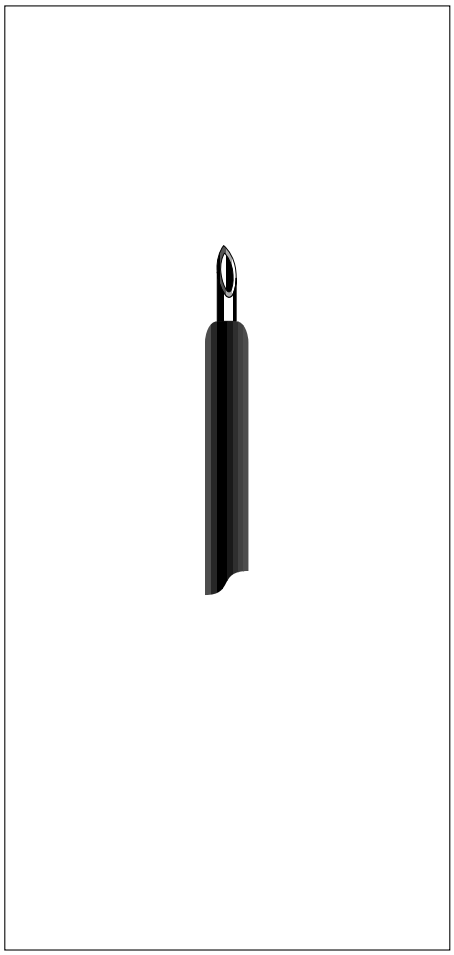

A Autoclavable L LuerLock

- 2 needles and outer Teflon® sheath
- Unique Handle with -safety clip not A-
- 1.0 mm Needle diameter
- 4.0 mm Needle length

How to use the catalog?
Place the appropriate endoscope manufacturer's card through the file rings on the desired instrument page. The shaded sections on the endoscope cards should match up to the shaded sections on the catalog pages. Match up the endoscope model number with the appropriate instrument and corresponding catalog order number.

Order-No.

231250SU

231360SU

231360SU
231360SU
231360SU
231360SU

231250SU
231250SU
231250SU

231460SU
231460SU
231460SU
231460SU
231460SU
231460SU
231460SU
231460SU
231460SU
231460SU
231460SU

Double Lumen Coaxial Needle System for local injection of Fibrin Sealant

Ø 2.5 mm

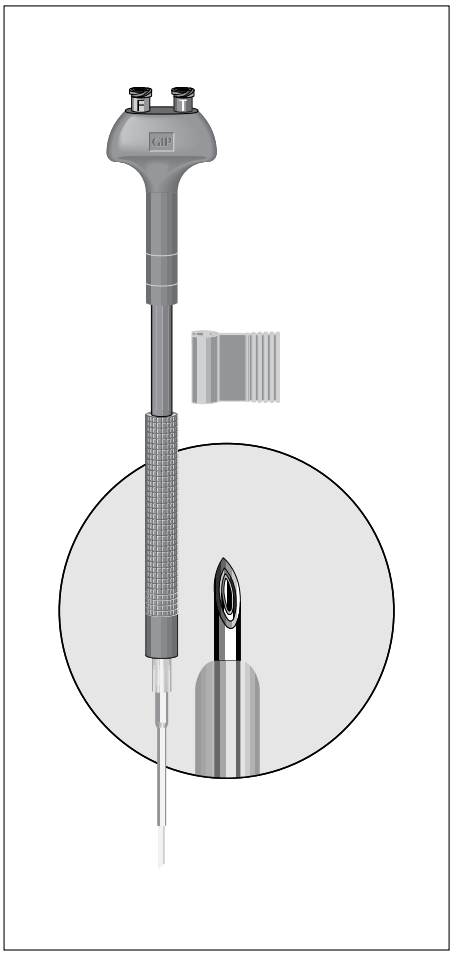

L LuerLock | S Sterile | 2 SingleUse

- Needle and outer Teflon® sheath
- Unique Handle with safety clip
- 1.2 mm Needle diameter
- 4.0 mm Needle length
- 15° bevel

How to use the catalog?
Place the appropriate endoscope manufacturer's card through the file rings on the desired instrument page. The shaded sections on the endoscope cards should match up to the shaded sections on the catalog pages. Match up the endoscope model number with the appropriate instrument and corresponding catalog order number.

Order-No.

232250SU
232360SU
232360SU
232360SU
232360SU
232360SU
232250SU
232250SU
232250SU
232460SU
232460SU
232460SU
232460SU
232460SU
232460SU
232460SU
232460SU
232460SU
232460SU
232460SU

Double Lumina Coaxial Needle System for local injection of Fibrin Sealant

Ø 2.5 mm

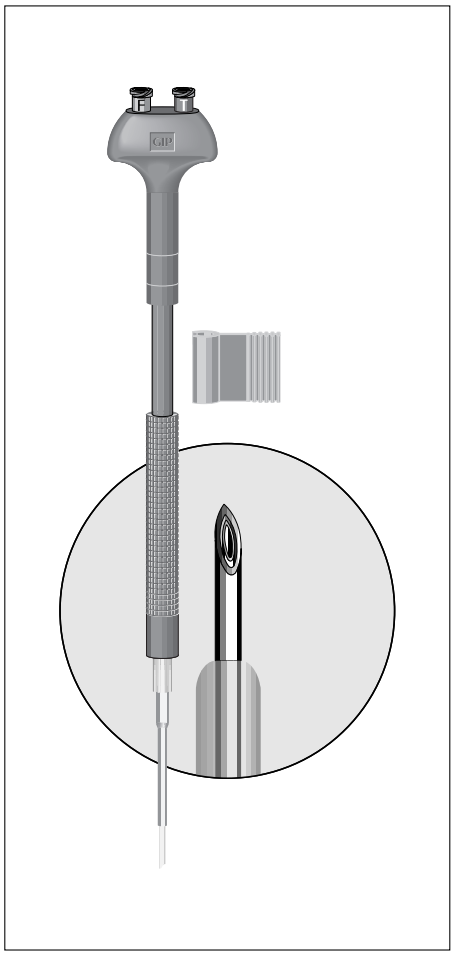

L LuerLock | S Sterile | 2 SingleUse

- Needle and outer Teflon® sheath
- Unique Handle with safety clip
- 1.2 mm Needle diameter
- 6.0 mm Needle length
- 15° bevel

Patented Needle System for Ultrasonic FNA "Type Hancke Vilmann"

Order no.	Description
222280	22 Gauge Needle sytem for ultrasonic FNA "Type Hancke Vilmann"; consists of 1 stainless steel needle with stylet, length 1.400 mm; 1 Metal Spiral, ø 1.8 mm and 1 handle
222282	Needle for ultrasonic FNA; stainless steel (22 gauge) with stylet, length 1.400 mm; 2 Single-use
222284	Metal Spiral for FNA needle 222280; ø 1,8 mm; with screw-thread; A Autoclavable

223280	19 Gauge Needle sytem for ultrasonic FNA "Type Hancke Vilmann"; consists of 1 stainless steel needle with stylet, length 1.400 mm; 1 Metal Spiral, ø 1.8 mm and 1 handle
223282	Needle for ultrasonic FNA; stainless steel (19 gauge) with stylet, length 1.400 mm; 2 Single-use
223284	Metal Spiral for FNA needle 223280; ø 2,1 mm; with screw-thread; A Autoclavable

100202	Aluminium handle (reusable) for 22 Gauge and 19 Gauge ultrasonic FNA needle with the possibility for 0 - 120 mm needle projection A Autoclavable

Cleaning and Sterilization:
The complete system can be autoclaved with 134° C (273° F), 2.0 bar (28.0psi), 5 minutes
126° C (259° F), 1.4 bar (20.3psi), 15 minutes
121° C (250° F), 1.0 bar (14.5psi), 20 minutes

S Sterile

How to use the catalog?
Place the appropriate endoscope manufacturer's card through the file rings on the desired instrument page. The shaded sections on the endoscope cards should match up to the shaded sections on the catalog pages. Match up the endoscope model number with the appropriate instrument and corresponding catalog order number.

Order-No.
302240
302240
302360
302360
302360
302360
302360
302360
302360
302360
302360
302360
302240
302240
302240
302360
302360
302360
302360
100300
302243
302363

Related accessories (required):
Handle (page II) →
Teflon® sheath for: 302240 →
Teflon® sheath for: 302360 →

Cytology Brush

Ø 2.3 mm

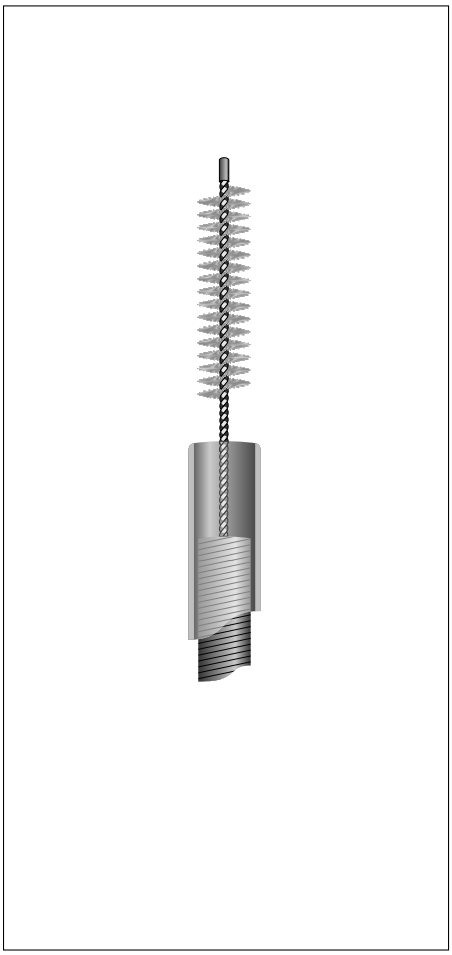

L LuerLock | S Sterile | 2 SingleUse

- Set consists of 12 brushes
- Teflon® sheath with metal shaft A

Transpapillary Flap-Endoprosthesis Sets

Used to endoscopically drain obstructed bile ducts. The positioning sleeve is used to collapse the proximal wing on the stent to aid introduction into the endoscope channel inlet.

Guide Wire

7,2 Fr-Set: stainless steel, fixed core/Other french sizes: Teflon® coated stainless steel, fixed core

Guiding Catheter

Radiopaque Teflon® with gold ring

Positioner

FEP

Flap stent with positioning sleeve

Radiopaque Polyethylene

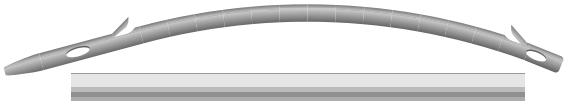

Set	Stent		Guide Wire		Guiding Catheter		Positioner	
Order no.	French size	Length between wings	Diameter	Length	French size	Length	French size	Length
920 72 400	7,2	4 cm	.035"(0.89mm)	400 cm	N/A	N/A	6,0	220 cm
921 72 600	7,2	6 cm	.035"(0.89mm)	400 cm	N/A	N/A	6,0	220 cm
922 72 800	7,2	8 cm	.035"(0.89mm)	400 cm	N/A	N/A	6,0	220 cm
923 72 110	7,2	11 cm	.035"(0.89mm)	400 cm	N/A	N/A	6,0	220 cm
924 72 160	7,2	16 cm	.035"(0.89mm)	400 cm	N/A	N/A	6,0	220 cm
920 85 400	8,5	4 cm	.035"(0.89mm)	400 cm	5,0	220 cm	8,5	145 cm
921 85 600	8,5	6 cm	.035"(0.89mm)	400 cm	5,0	220 cm	8,5	145 cm
922 85 800	8,5	8 cm	.035"(0.89mm)	400 cm	5,0	220 cm	8,5	145 cm
923 85 110	8,5	11 cm	.035"(0.89mm)	400 cm	5,0	220 cm	8,5	145 cm
924 85 160	8,5	16 cm	.035"(0.89mm)	400 cm	5,0	220 cm	8,5	145 cm
920 10 400	10,0	4 cm	.035"(0.89mm)	400 cm	6,0	220 cm	10,0	145 cm
921 10 600	10,0	6 cm	.035"(0.89mm)	400 cm	6,0	220 cm	10,0	145 cm
922 10 800	10,0	8 cm	.035"(0.89mm)	400 cm	6,0	220 cm	10,0	145 cm
923 10 110	10,0	11 cm	.035"(0.89mm)	400 cm	6,0	220 cm	10,0	145 cm
924 10 160	10,0	16 cm	.035"(0.89mm)	400 cm	6,0	220 cm	10,0	145 cm
920 11 400	11,5	4 cm	.035"(0.89mm)	400 cm	6,0	220 cm	11,5	145 cm
921 11 600	11,5	6 cm	.035"(0.89mm)	400 cm	6,0	220 cm	11,5	145 cm
922 11 800	11,5	8 cm	.035"(0.89mm)	400 cm	6,0	220 cm	11,5	145 cm
923 11 110	11,5	11 cm	.035"(0.89mm)	400 cm	6,0	220 cm	11,5	145 cm
924 11 160	11,5	16 cm	.035"(0.89mm)	400 cm	6,0	220 cm	11,5	145 cm

For individual set-components, please refer to page 12.4

S Sterile 2 SingleUse

Individual Transpapillary Flap-Endoprosthesis Set-Components

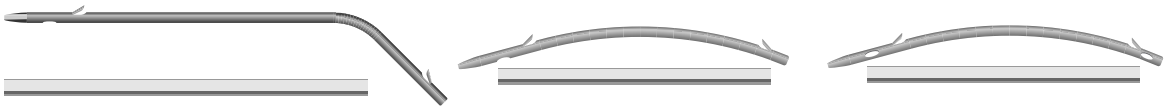

Stent			Stent			Stent		
Order no.	French size	Length between wings	Order no.	French size	Length between wings	Order no.	French size	Length between wings
934 07 005	7,2	5 cm	954 07 005	7,2	5 cm	909 05 004	5,0	4 cm
934 07 007	7,2	7 cm	954 07 007	7,2	7 cm	909 05 006	5,0	6 cm
934 07 009	7,2	9 cm	954 07 009	7,2	9 cm	909 05 008	5,0	8 cm
934 07 012	7,2	12 cm	954 07 012	7,2	12 cm	909 05 011	5,0	11 cm
934 07 015	7,2	15 cm	954 07 015	7,2	15 cm	909 05 016	5,0	16 cm
934 85 005	8,5	5 cm	954 85 005	8,5	5 cm	909 72 004	7,2	4 cm
934 85 007	8,5	7 cm	954 85 007	8,5	7 cm	909 72 006	7,2	6 cm
934 85 009	8,5	9 cm	954 85 009	8,5	9 cm	909 72 008	7,2	8 cm
934 85 012	8,5	12 cm	954 85 012	8,5	12 cm	909 72 011	7,2	11 cm
934 85 015	8,5	15 cm	954 85 015	8,5	15 cm	909 72 016	7,2	16 cm
934 10 005	10,0	5 cm	954 10 005	10,0	5 cm	909 85 004	8,5	4 cm
934 10 007	10,0	7 cm	954 10 007	10,0	7 cm	909 85 006	8,5	6 cm
934 10 009	10,0	9 cm	954 10 009	10,0	9 cm	909 85 008	8,5	8 cm
934 10 012	10,0	12 cm	954 10 012	10,0	12 cm	909 85 011	8,5	11 cm
934 10 015	10,0	15 cm	954 10 015	10,0	15 cm	909 85 016	8,5	16 cm
934 11 005	11,5	5 cm	954 11 005	11,5	5 cm	909 10 004	10,0	4 cm
934 11 007	11,5	7 cm	954 11 007	11,5	7 cm	909 10 006	10,0	6 cm
934 11 009	11,5	9 cm	954 11 009	11,5	9 cm	909 10 008	10,0	8 cm
934 11 012	11,5	12 cm	954 11 012	11,5	12 cm	909 10 011	10,0	11 cm
934 11 015	11,5	15 cm	954 11 015	11,5	15 cm	909 10 016	10,0	16 cm
						909 11 004	11,5	4 cm
						909 11 006	11,5	6 cm
						909 11 008	11,5	8 cm
						909 11 011	11,5	11 cm
						909 11 016	11,5	16 cm

Guide Wire, Teflon® coated stainless steel

Order no.	Diameter	Length	Type
900 35 400	.035"(0.89mm)	400 cm	fixed core
901 35 400	.035"(0.89mm)	400 cm	fixed core

Guiding Catheter

Order no.	French size	Length
909 05 320	5,0	320 cm
909 06 220	6,0	220 cm
909 06 320	6,0	320 cm

Positioner

Order no.	Size	Length
908 06 160	6,0	160 cm
909 07 160	7,0	160 cm
909 07 165	7,0	165 cm
909 85 160	8,5	160 cm
909 85 165	8,5	165 cm
909 10 160	10,0	160 cm
909 10 165	10,0	165 cm
909 11 145	11,5	145 cm
909 11 160	11,5	160 cm

S Sterile 2 SingleUse

Individual Transpapillary Pigtail Set-Components

Stent Order no.	French size	Length
900 07 025	7,2	25 cm
900 10 025	10,0	25 cm

Stent Order no.	French size	Length
905 05 006	5,0	6 cm
905 05 009	5,0	9 cm
905 05 012	5,0	12 cm
905 07 006	7,2	6 cm
905 07 009	7,2	9 cm
905 07 012	7,2	12 cm
905 10 006	10,0	6 cm
905 10 009	10,0	9 cm
905 10 012	10,0	12 cm

Positioner Order no.	French size	Length
900 07 250	7,0	250 cm
900 10 250	10,0	250 cm

Guide Wire, Teflon® coated stainless steel Order no.	Diameter	Length	Type
901 35 300	.035"(0.89mm)	300 cm	fixed core
901 52 300	.052"(1.32mm)	300 cm	fixed core

S Sterile 2 SingleUse

Nasal Biliary Drainage Sets

Used for biliary duct drainage through the nasal passage.

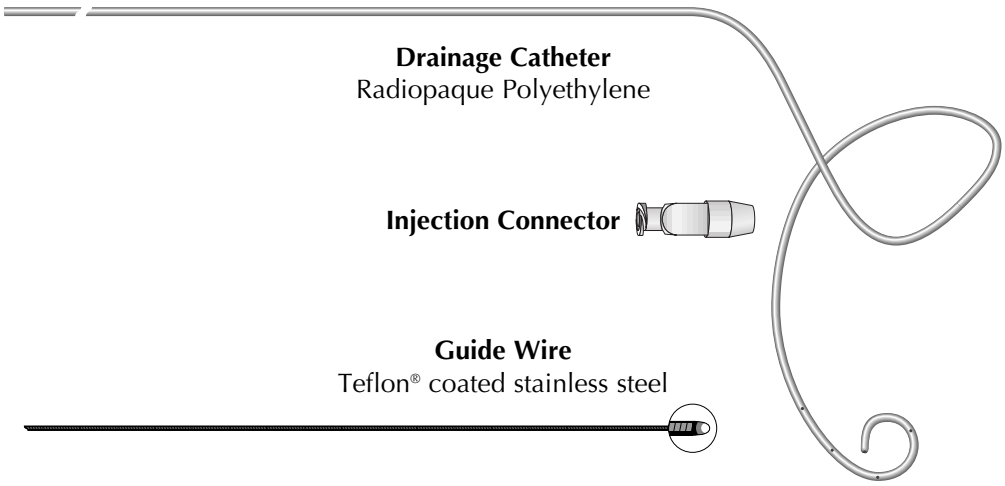

Set	Drainage		Guide Wire		
Order no.	French	Length	Diameter	Length	Type
914 07 000	7,0	290 cm	.035"(0.89mm)	300 cm	fixed core

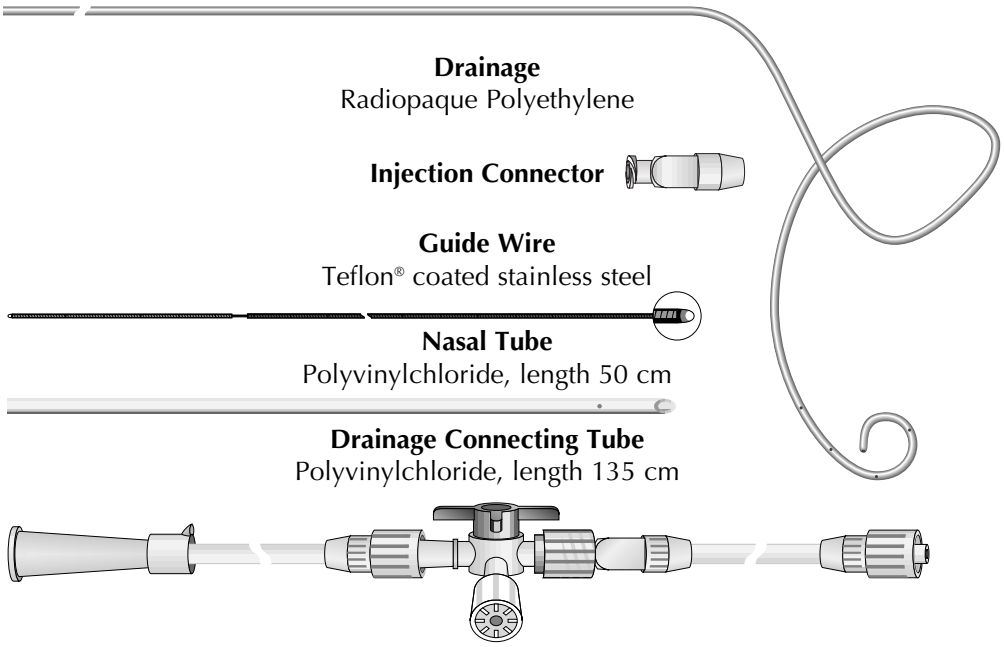

Set	Drainage		Guide Wire		
Order no.	French	Length	Diameter	Length	Type
924 05 000	5,0	290 cm	.035"(0.89mm)	400 cm	movable core
924 07 000	7,0	290 cm	.035"(0.89mm)	400 cm	movable core

For individual set-components, please refer to page 12.10 & 12.11

S Sterile 2 SingleUse

Individual Nasal Biliary Drainage Set-Components

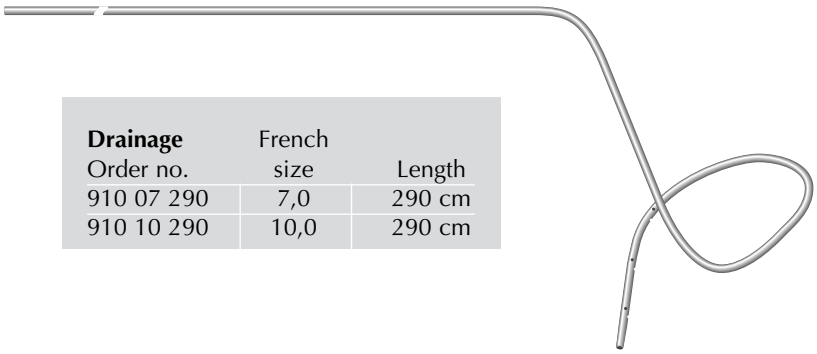

Drainage Order no.	French size	Length
910 07 290	7,0	290 cm
910 10 290	10,0	290 cm

Drainage Order no.	French size	Length
913 05 290	5,0	290 cm
913 07 290	7,0	290 cm

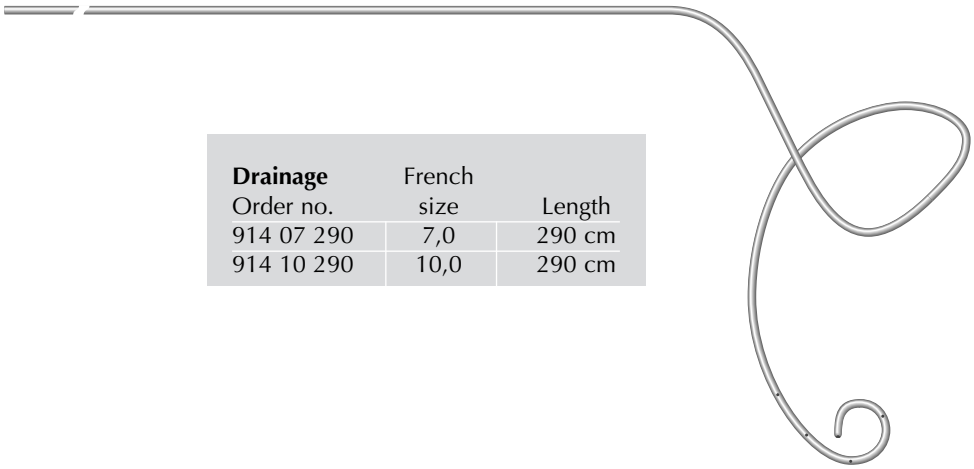

Drainage Order no.	French size	Length
914 07 290	7,0	290 cm
914 10 290	10,0	290 cm

S Sterile | 2 SingleUse

Guide Wires

Guide Wire, stainless steel

2 SingleUse

Order no.	Diameter	Length	Type	Soft tip
900 35 300	.035"(0.89mm)	300 cm	fixed core	3 cm
900 35 400	.035"(0.89mm)	400 cm	fixed core	3 cm

Guide Wire, Teflon® coated stainless steel

2 SingleUse

Order no.	Diameter	Length	Type	Soft tip
901 18 300	.018"(0.46mm)	300 cm	fixed core	3 cm
901 21 300	.021"(0.53mm)	300 cm	fixed core	3 cm
901 21 400	.021"(0.53mm)	400 cm	fixed core	3 cm
901 25 400	.025"(0.64mm)	400 cm	fixed core	3 cm
901 28 400	.028"(0.71mm)	400 cm	fixed core	3 cm
901 35 300	.035"(0.89mm)	300 cm	fixed core	3 cm
901 35 400	.035"(0.89mm)	400 cm	fixed core	3 cm
901 52 300	.052"(1.32mm)	300 cm	fixed core	3 cm

Guide Wire, Teflon® coated stainless steel, movable core

2 SingleUse

Order no.	Diameter	Length	Type	Soft tip
902 35 260	.035"(0.89mm)	260 cm	movable core	variable
902 35 400	.035"(0.89mm)	400 cm	movable core	variable

NEW!

Nitinol Guide Wire; Kink-resistant; Teflon®-coated; Radiopaque, tapered, flexible Platinum tip; White/blue color marking

A Autoclavable

Order no.	Diameter	Length	Type	Soft tip
904 35 400	.035"(0.89mm)	400 cm	fixed core	5 cm

S Sterile

Stiffening Guide Wires and Handle

This innovative guide wire can be stiffened without using any additional remedy. No other system currently achieves its rigidity. The guide wire has such a dimension which allows for direct placement of large sized endoprostheses. Guiding catheters are no longer required. Unique distal tip with small ball allows easy positioning of the guide wire and prevents from getting caught while passing through irregular stenoses. As guide wire applicable for the following devices:

- Esophagus balloons and dilators
- Pylorus balloons
- Colon decompression catheters

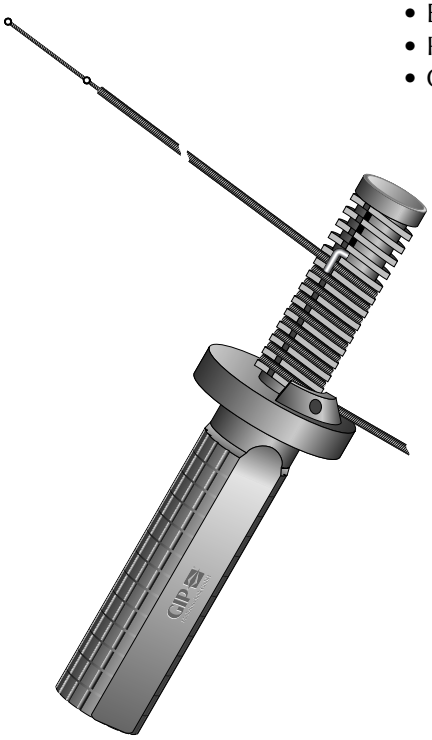

Stiffening Guide:

Order no.	Diameter	Length
970 35 300	0.89 mm / .035 inch	3.000 mm
970 35 400	0.89 mm / .035 inch	4.000 mm
970 59 300	1.5 mm / .059 inch	3.000 mm
970 59 400	1.5 mm / .059 inch	4.000 mm
970 87 260	2.2 mm / .087 inch	2.600 mm
970 87 300	2.2 mm / .087 inch	3.000 mm
970 87 400	2.2 mm / .087 inch	4.000 mm

Handle

100 900	Handle for Stiffening Guide 2.2 mm

Colonoscope Stiffener:

Order no.	Diameter	Length
971 18 260	3.00 mm / .118 inch	2.600 mm

Handle

100 901	Handle for Colonoscope stiffener 3.0 mm

A Autoclavable

Double Lumen Balloon Catheter for Gallstone Extraction

Used during endoscopy for the removal of stones from the common bile duct.
Double lumen used for injection or infusion of contrast medium and irrigating liquids.

The product is recommended for single use only.

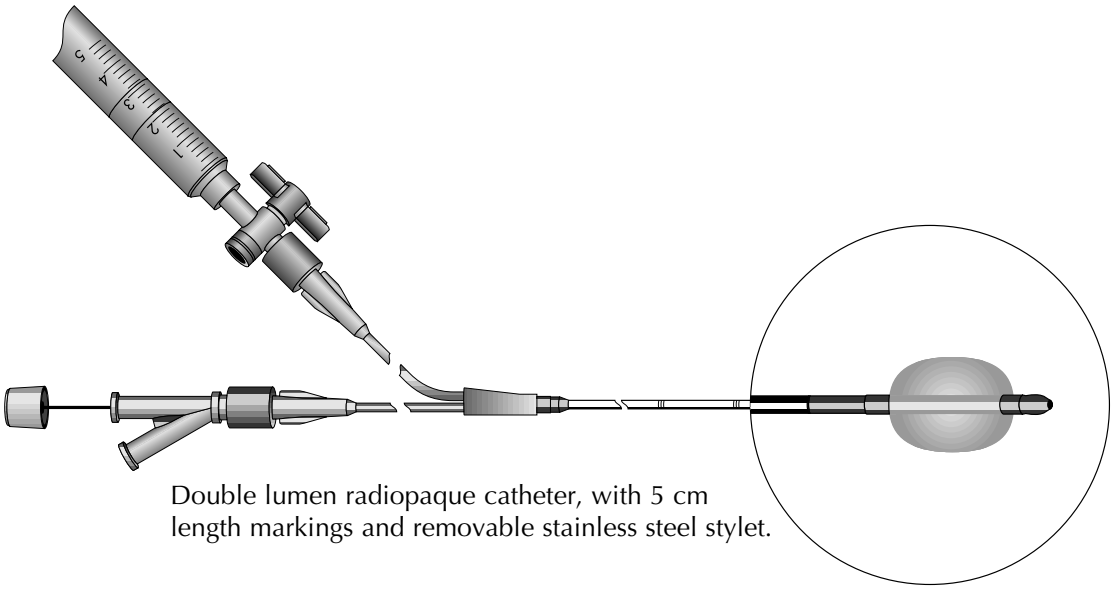

Double lumen radiopaque catheter, with 5 cm length markings and removable stainless steel stylet.

Order no.	French size	Length	Deflated Balloon ø	Inflated Balloon ø	Maximum Gas infl.	Maximum Liquid infl.	Accepts Guide Wire
13 205	5	200 cm	1.7 mm	9 mm	3.0 ml	1.5 ml	0.018"
13 207	7	200 cm	2.3 mm	13 mm	4.5 ml	2.5 ml	0.035"

These Balloon Catheters are also available with a metal marking ring located at the distal tip. When ordering, please place an „R“ behind the order number.

L LuerLock | .018" Guide Wire | .035" Guide Wire | S Sterile | 2 SingleUse

How to use the catalog?
Place the appropriate endoscope manufacturer's card through the file rings on the desired instrument page. The shaded sections on the endoscope cards should match up to the shaded sections on the catalog pages. Match up the endoscope model number with the appropriate instrument and corresponding catalog order number.

Order-No.
540240
540240
540360
540360
540360
540360
540360
540360
540360
540360
540360
540360
540460
540460
540460
540460
540460
540460
540460
540460
540460
540460
540460

Spray Catheter

Ø 2.3 mm

A Autoclavable | L LuerLock

- Teflon® sheath
- 1.2 m long stylet included

Colon Decompression Catheter Set

Used for colonoscopic decompression in toxic mega colon, pseudo obstruction and decompression of the colon proximal to a stricture. The product is recommended for single use only.

Decompression Catheter
Radiopaque Polyvinylchloride with 6 side holes

Guide Wire
Teflon® coated stainless steel, fixed core

Set	**Catheter**		**Guide Wire**	
Order no.	French size	Length	Diameter	Length
95 014 000	14	175 cm	.035" (0.89 mm)	400 cm
95 016 000	16	175 cm	.035" (0.89 mm)	400 cm
95 018 000	18	175 cm	.035" (0.89 mm)	400 cm

Individual Set-Components

Catheter			Accepts
Order no.	French size	Length	Guide Wire or Windup Guide
95 014 175	14	175 cm	.035"
95 016 175	16	175 cm	.035"
95 018 175	18	175 cm	.035"
95 118 175	18	175 cm	.087" (2.2 mm)

Guide Wire		
Order no.	Diameter	Length
90 135 400	.035" (0.89 mm)	400 cm

.035" Guide Wire | .087" Guide Wire | S Sterile | 2 SingleUse

Percutaneous Gastrostomy Sets for Intragastric Long-term Nutrition
PEGGI

Fields of Application:
- gastric long-term nutrition in case of
  - cachexia
  - disphagii of diverse geneses
  - tumors in the ENT region
  - polytrauma
  - major oral and facial surgery
- gastric decompression and drainage
- as guide tube for an intestinal tube
  - for intestinal long-term nutrition
  - for gastric decompression and simultaneous intestinal long-term nutrition
  - for intestinal gall recycling with simultaneous gastral nutrition

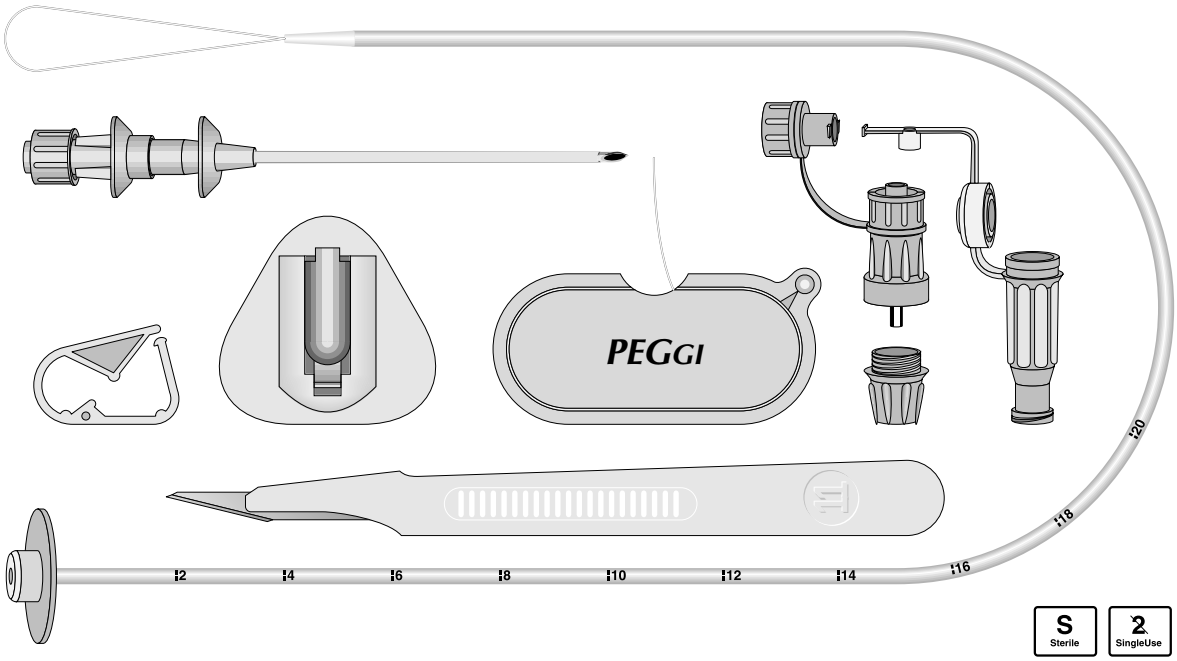

Composition of Set:
One transparent polyurethane tube, 40 cm, with
- radioopaque strip
- flexible internal holding disc made of silicone
- rounded terminal opening
- pull-through tip with integrated fixation loop
- linear markings in 2 cm intervals up to 20 cm from inside holding disc

Application accessories (one each)
- Cutfix® scalpel
- puncture needle Braunüle® MT
- guide thread
- outer silicone holding disc
- on-off rachet clamp
- Luer lock adapter
- universal adapter for Luer and irrigation syringes

Endoscopically controlled pull method

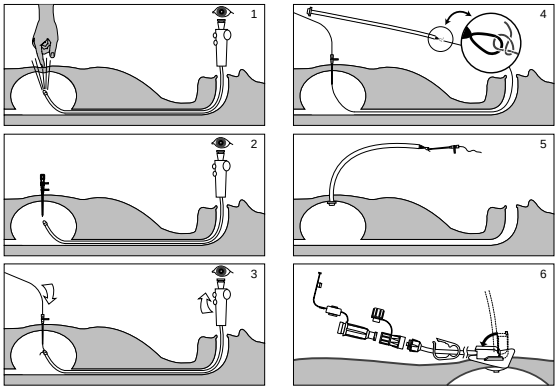

Ordering Information

Order no.	Discription	Diameter
909009	*PEGGI* Set CH 9	9 French [5]
909015	*PEGGI* Set CH 15	15 French [5]
Individual Components		
909002	Adapter for Luer & irrigation syringes [10]	
909003	On-off rachet clamp [10]	
909109	Luer lock adapter for CH 9 tube [10]	
909115	Luer lock adapter for CH 15 tube [10]	
909209	Outer holding disc for CH 9 tube [5]	
909215	Outer holding disc for CH 15 tube [5]	

[5]Box of Five / [10]Box of Ten

Pill Splitter, Pill Crusher & Combination

Fields of Application:
- Tube feeding patients
- Pediatrics & geriatrics patients
- Visiting nurses & health care personnel
- Nurses station & medication carts
- Pharmacy locker & pharmacy department

Features:
- Dishwasher-safe
- Storage container
- Surgical stainless steel cutting blade
- Unique, ergonomic design
- Durable & stabil, high quality material

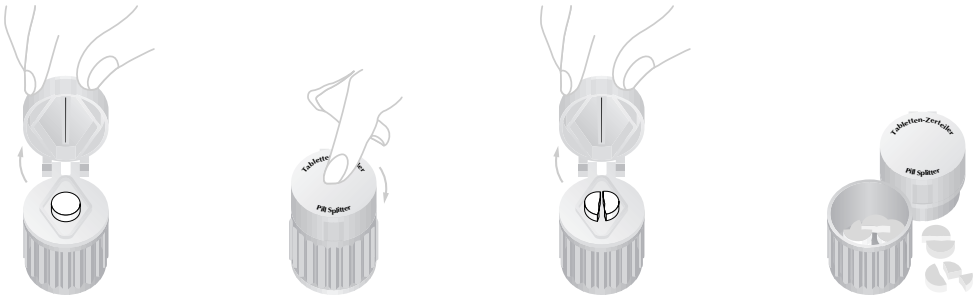

Pill Splitter
Order no. 010401

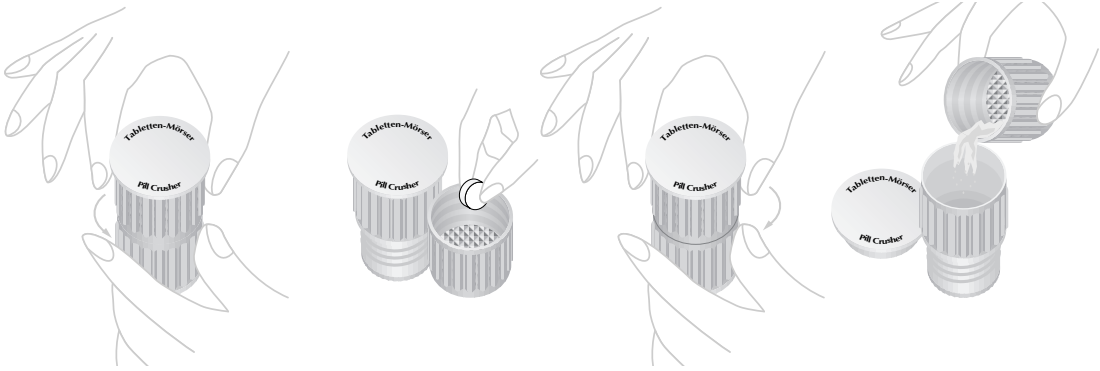

Pill Crusher
Order no. 010402

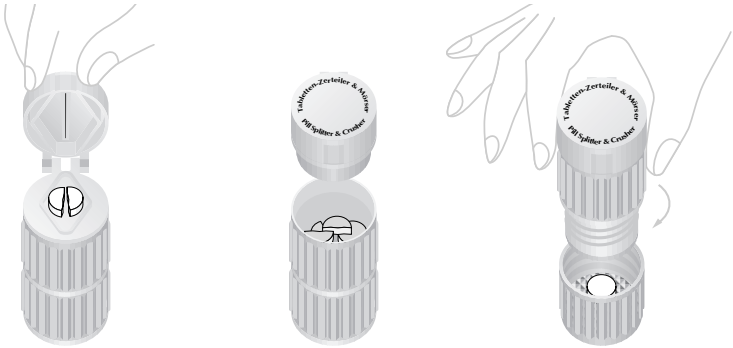

Pill Splitter/Crusher - Combination
Order no. 010403